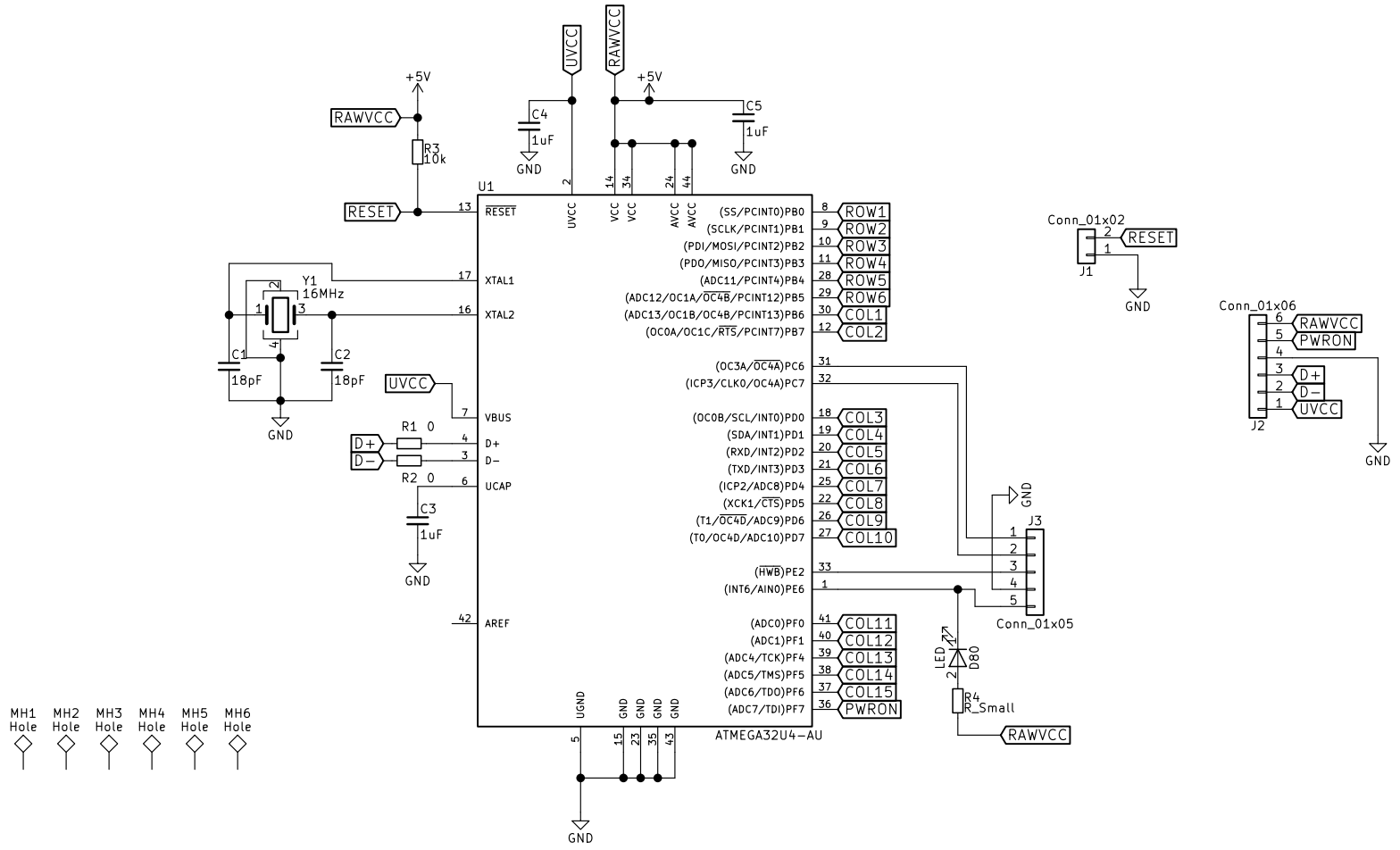

https://mntmn.com/reform
Copyright 2017,2018 Lukas F. Hartmann / mntmn
License: GPLv3+ https://www.gnu.org/licenses/gpl-3.0.en.html
MNT Media and Technology UG

Sheet: /Reform KBD MCU/
File: reform-kbd-mcu.sch

Title: Reform Keyboard

Size: A4	Date: 2018-11-11	**Rev: 0.4**
KiCad E.D.A. kicad 5.0.0-rc2+dfsg1-3		Id: 2/2