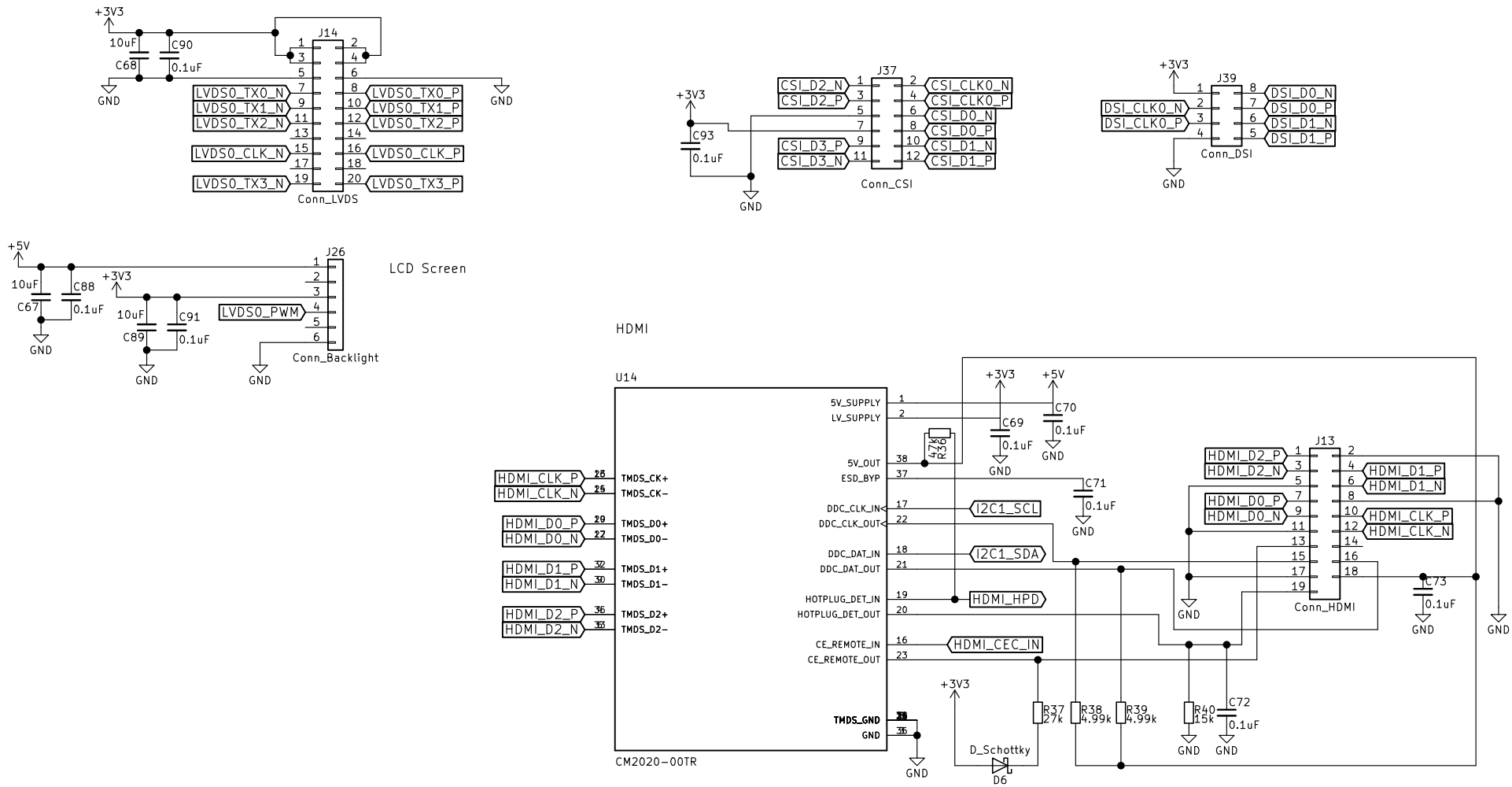

License: GPLv3 https://www.gnu.org/licenses/gpl-3.0.txt
Copyright 2017,2018 Lukas F. Hartmann / mntmn

https://mntmn.com/reform
MNT Media and Technology UG

Sheet: /ReformDisplay/
File: reform-display.sch

Title: MNT Reform Power / Charging

Size: A4	Date: 2018-06-05	**Rev: 0.4**
KiCad E.D.A. kicad 5.0.0-rc2+dfsg1-3		Id: 6/7